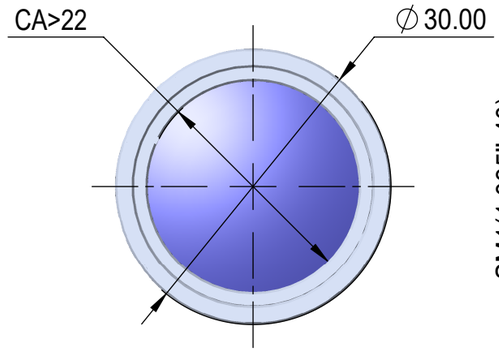

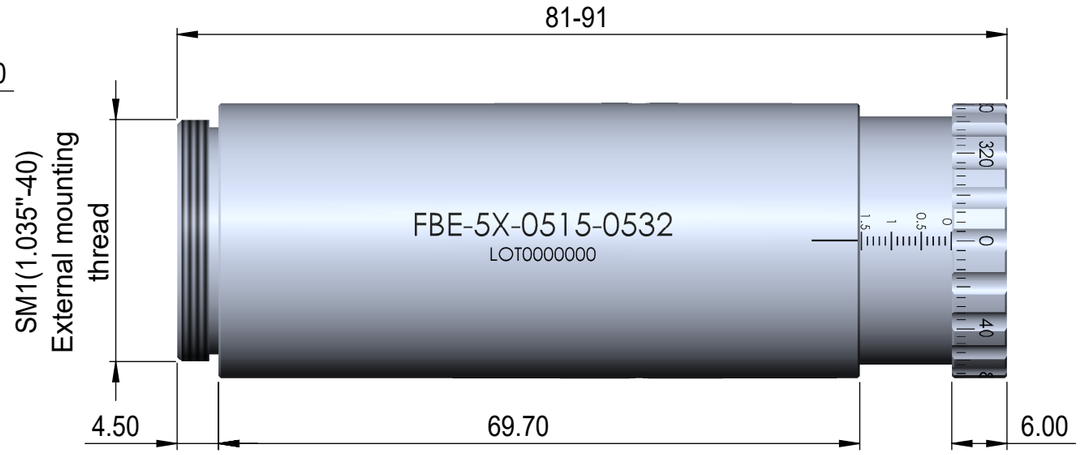

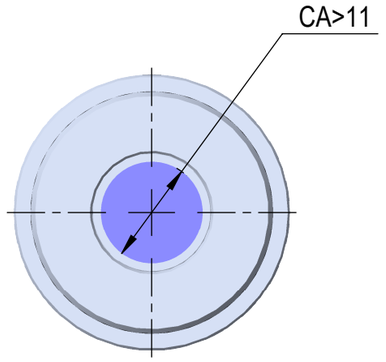

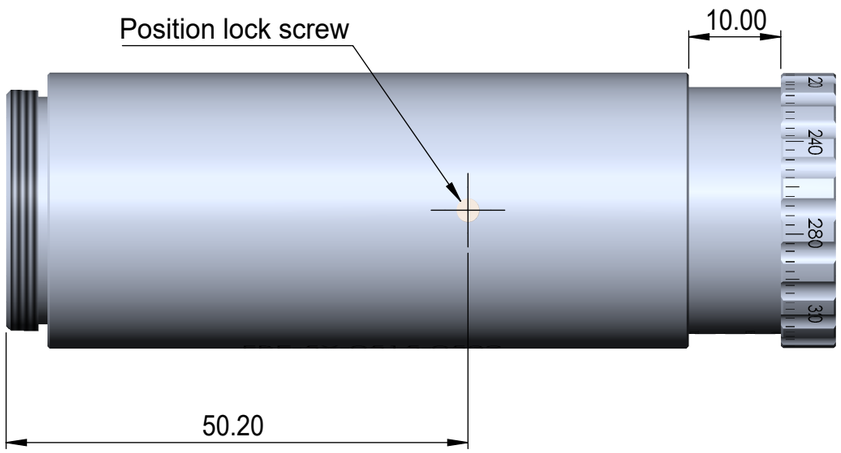

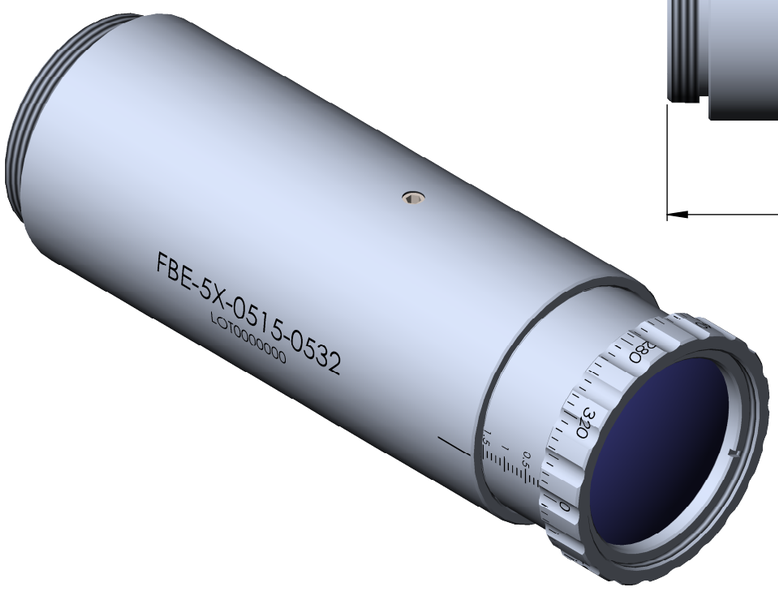

FOR INFORMATION ONLY
NOT FOR MANUFACTURING PURPOSES

Altechna
UAB ALTECHNA Mokslininkų st. 6A
08412 Vilnius, Lithuania

Designed by: M. Buzys	Scale 1.5:1	Size A3	
5X Fixed Beam Expander, @515-532 nm			
Part No. FBE-5X-0515-0532		Weight N/A	Sheet 1/1