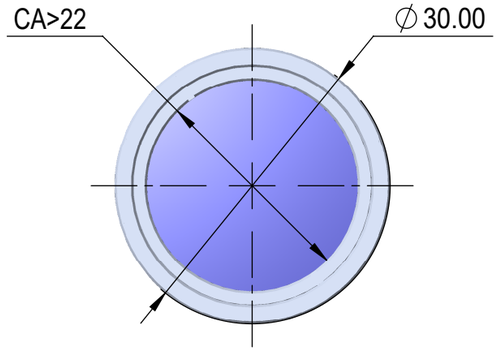

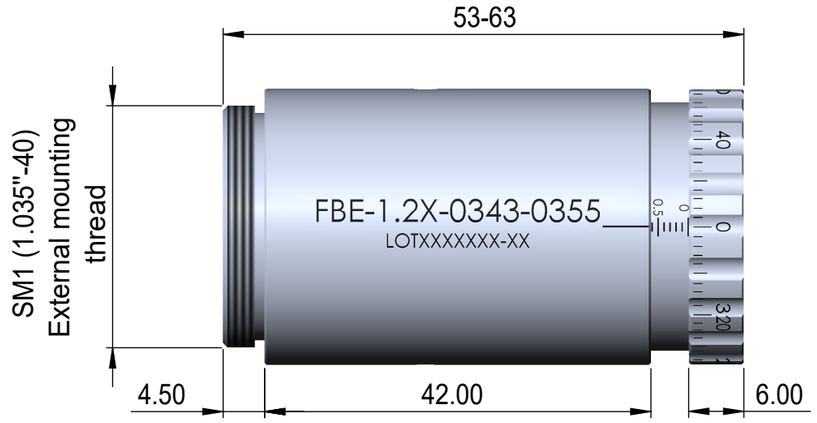

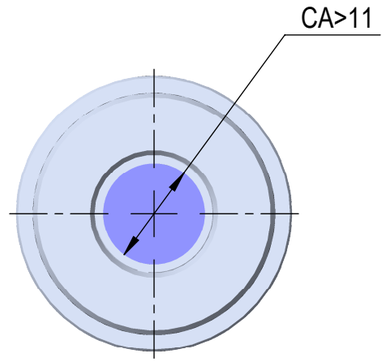

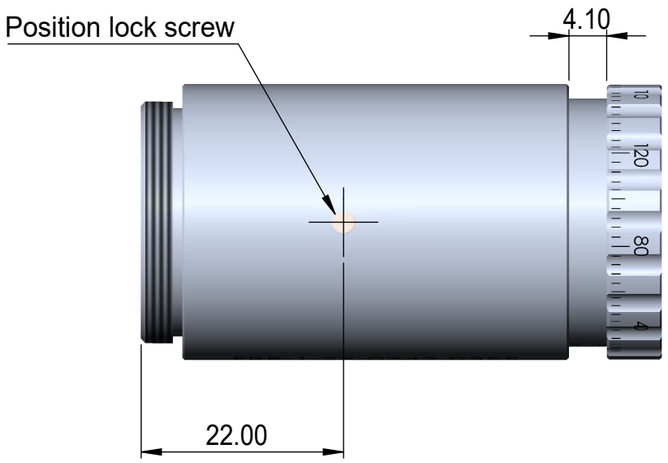

FOR INFORMATION ONLY
NOT FOR MANUFACTURING PURPOSES

Altechna
UAB ALTECHNA Mokslininkų st. 6A
08412 Vilnius, Lithuania

Designed by: M. Buzys	Scale 1.5:1	Size A3	
1.2X Fixed Beam Expander, @343-355 nm			
Part No. FBE-1.2X-0343-0355		Weight N/A	Sheet 1/1